# Mounting instructions TurboSwing® XM & XL

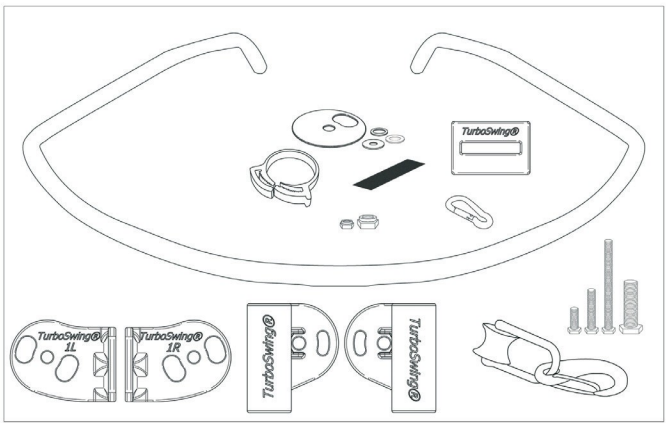


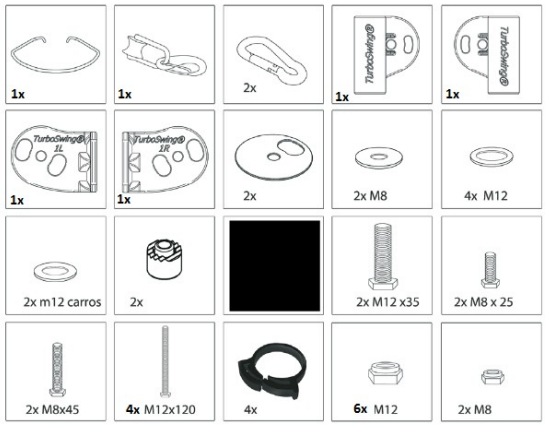


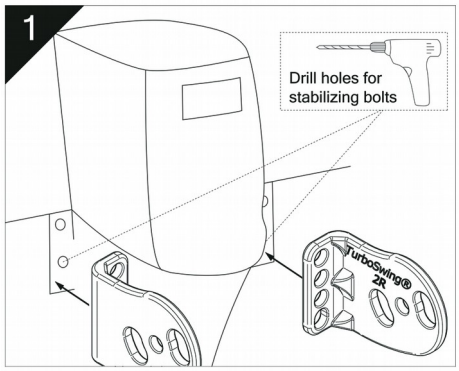


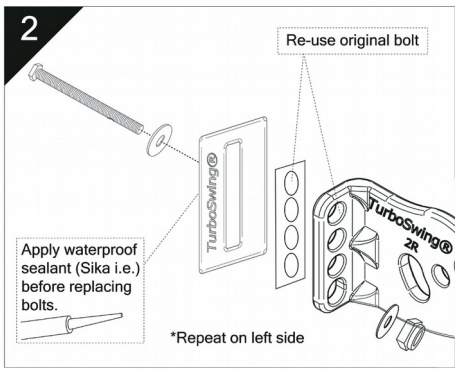


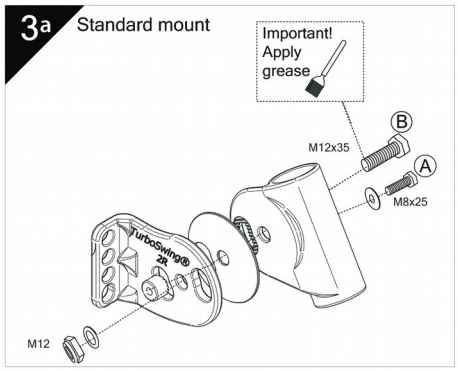


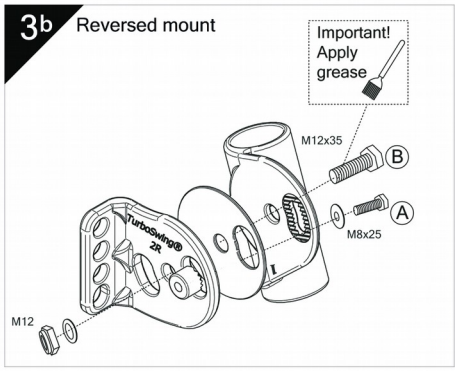


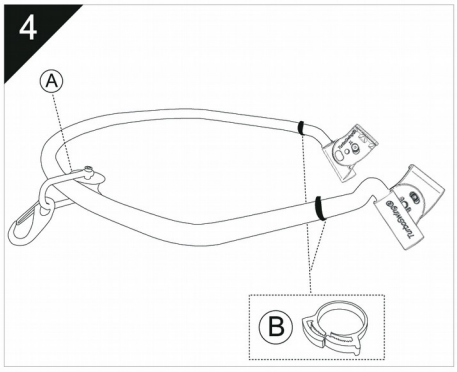


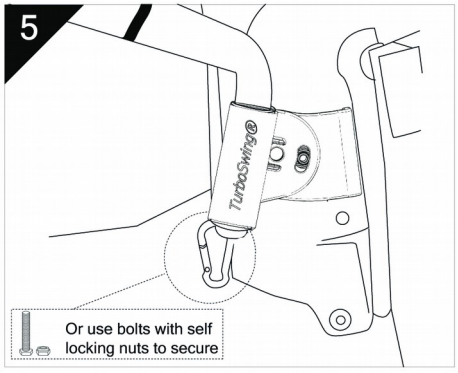


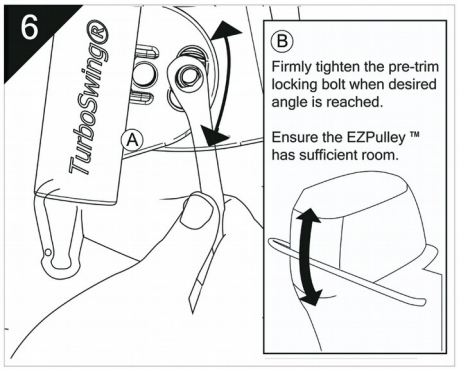


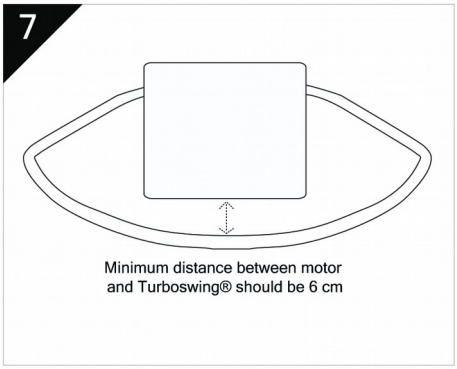


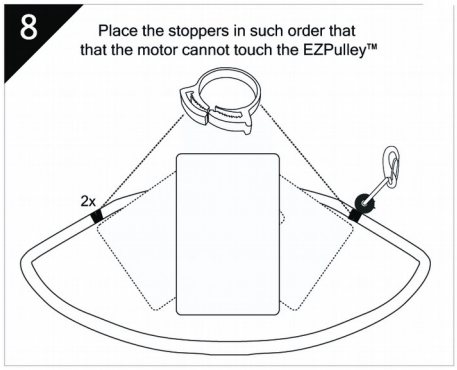


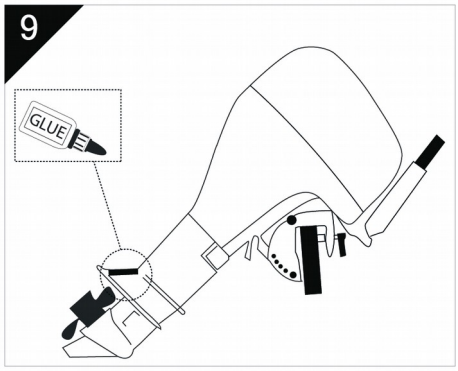

TurboSwing® the power behind your outboard

Part of Marine Accessories BV

Veerpolder 5-F
2361 KX Warmond
The Netherlands

Tel: +31(0)71-30 11 220
Fax: +31(0)71-30 10 044
info@turboswing.com
info@marineaccessories.eu